REMARK:

- FOR NITROGEN ROOM

1. AirDrye + filter
2. Carbon Filter
3. Tank 1000L SS400
4. Psa Nitrogen
5. Nitrogen Booster
6. Tank 1000L SUS304
7. Ball Valve 2 1/2"
8. X-Oil Filter

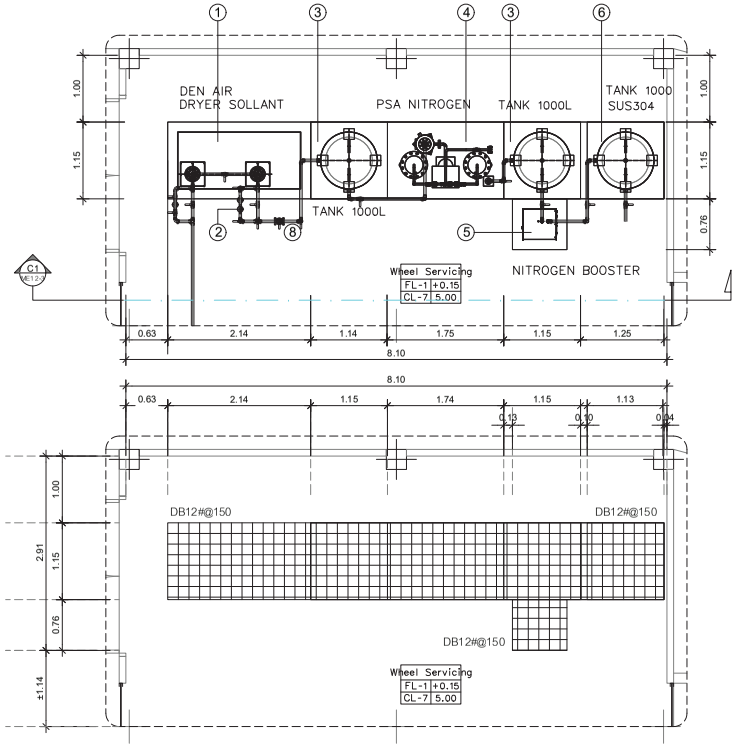

FLOOR PLAN (NITROGEN ROOM) C1
Scale 1 : 40 @A2

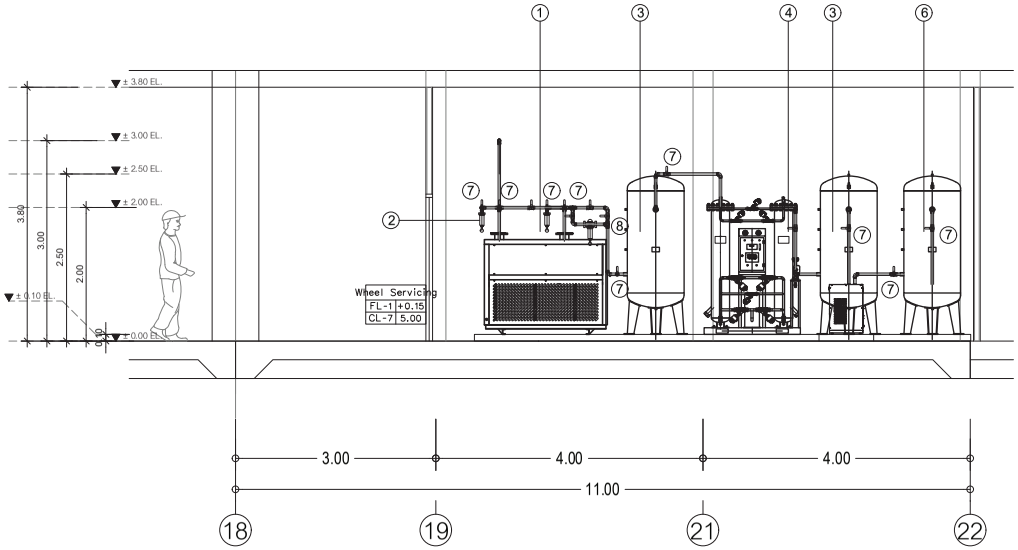

PLAN FOR STEEL PLATFORM
Scale 1 : 40 @A2

C1 ELEVATION: C1
Scale 1 : 40 @A2

REMARK:

- FOR AIR COMP ROOM

1. Air comp
2. Tank 1000L SS400
3. Dryer+filter
4. Tank 2000L SS400
5. Header Dia 4"
6. Ball Valve 2 1/2"

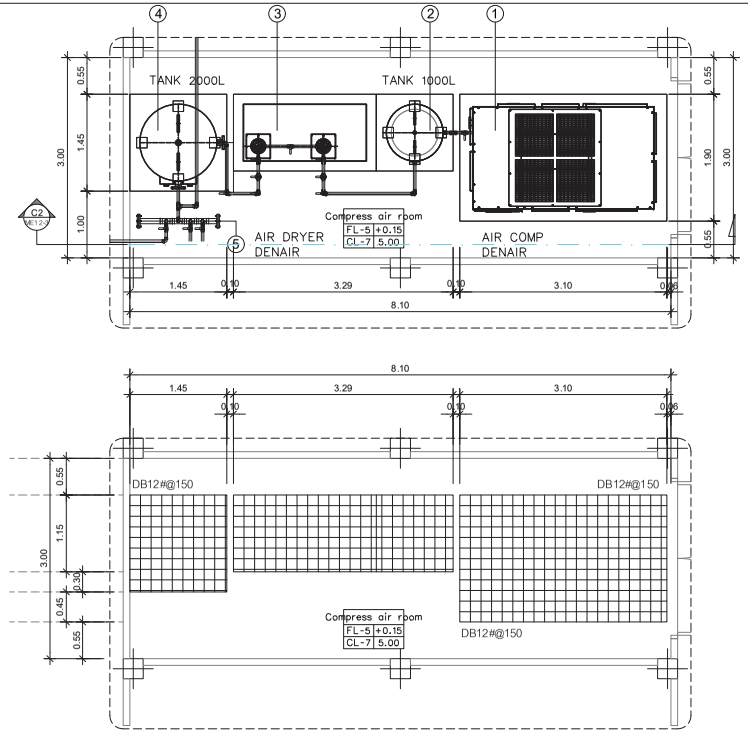

FLOOR PLAN (NITROGEN ROOM) C2
Scale 1 : 40 @A2

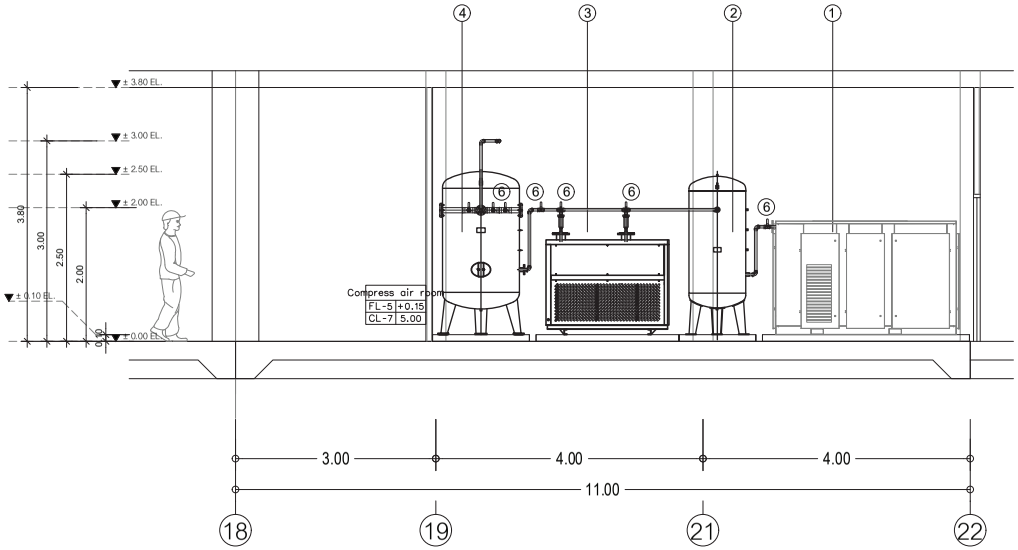

PLAN FOR STEEL PLATFORM
Scale 1 : 40 @A2

C2 ELEVATION: C2
Scale 1 : 40 @A2

Compressed Air NITROGEN GENERATOR SYSTEM

มาตราส่วน 1:40 @A2

แบบเลขที่ 690319 ME1 2/3

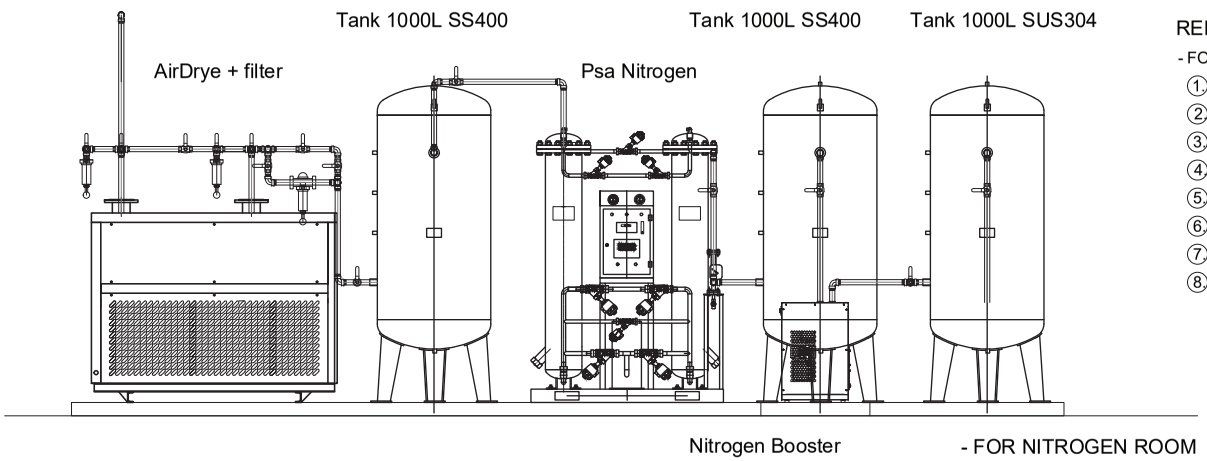

REMARK:

- FOR NITROGEN ROOM

1. AirDrye + filter
2. Carbon Filter
3. Tank 1000L SS400
4. Psa Nitrogen
5. Nitrogen Booster
6. Tank 1000L SUS304
7. Ball Valve 2 1/2"
8. X-Oil Filter

DIAGRAM FOR NITROGEN ROOM

SCALE 1:20 @A2

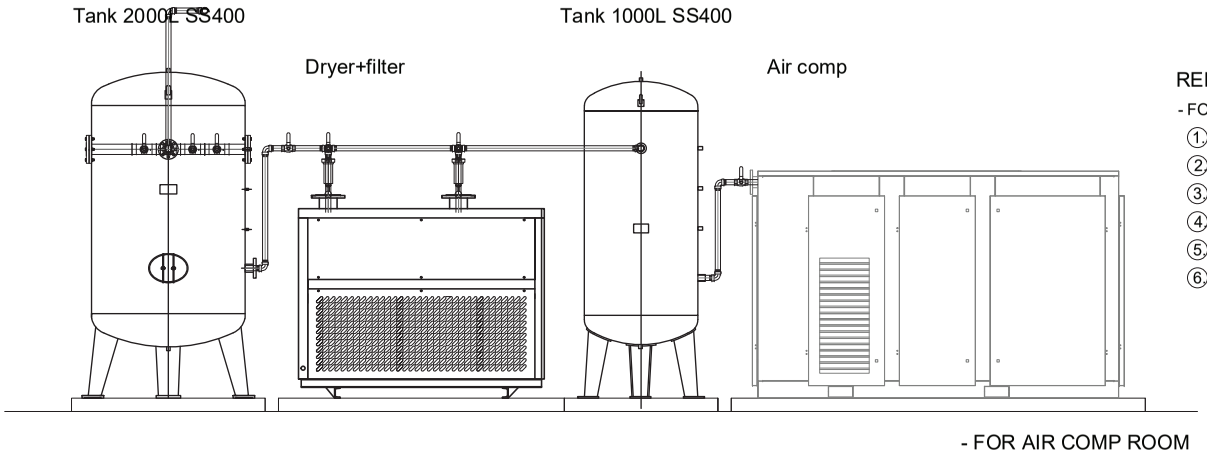

REMARK:

- FOR AIR COMP ROOM

1. Air comp
2. Tank 1000L SS400
3. Dryer+filter
4. Tank 2000L SS400
5. Header Dia 4"
6. Ball Valve 2 1/2"

DIAGRAM FOR AIR COMP ROOM

SCALE 1:20 @A2

Compressed Air NITROGEN GENERATOR SYSTEM

มาตราส่วน 1:20 @A2

แบบเลขที่ 690319 ME1 3/3